REVISIONS			
LTR	DESCRIPTION	DATE	APPROVED
0	ORIGINAL	12/75	
1	ECN76–0051 & ECO77–0039	11/76 & 4/77	
2	ECO77–0098	8/77	

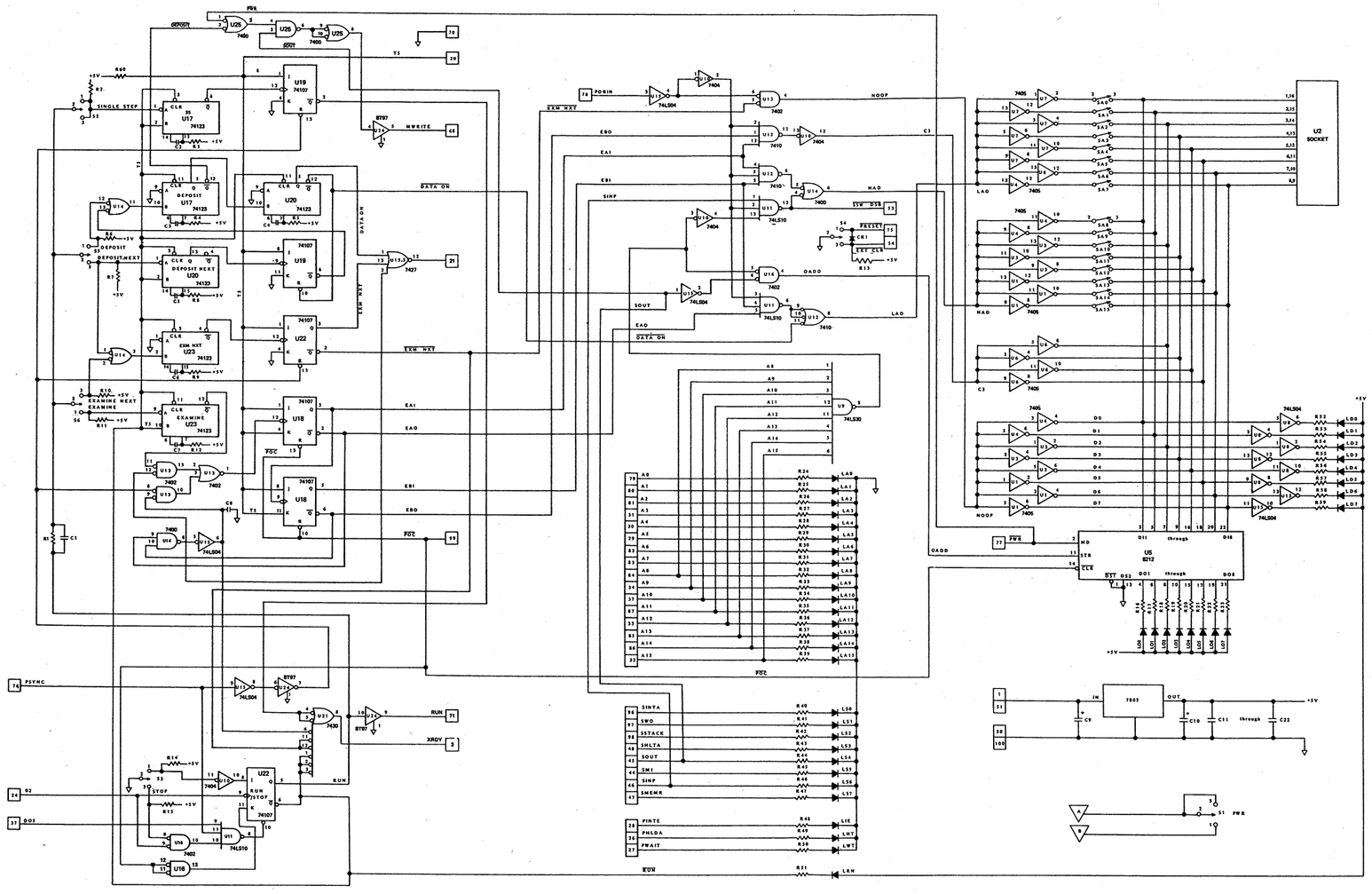

U1	7405	LO0 THRU LO7	LED'S
U3			
U4			
U6		LA0 THRU LA15	
U7			
U2	DATA HEADER SOCKET	LD0 THRU LD7	
U5	8212	LS0 THRU LS7	
U8	74LS04	LIE	
U15		LHD	
U9	74LS30	LRN	
U10	7404	LWT	
U11	74LS10	R1	270K ¼W
U12	7410	R2	1K ¼W
U13	7402	R6	
U16		R7	
U14	7400	R10	
U25		R11	
U15.5	7427	R13	
U17	74123	R15	
U20		R60	
U23		R3	47K ¼W
U18	74107	R4	
U19		R5	
U22		R8	
U21	7430	R9	
U24	8T97	R12	
C1	.1 uF	R16 THRU R59	220 ¼W
C2			
C5			
C6			
C7			
C11 THRU C22			
C3	.001 uF		
C8			
C4	.01 uF		
C9	33 uF		
C10			
CR1	1N914		

TOLERANCES UNLESS OTHERWISE SPECIFIED
FRACTIONS ± DEC. ± ANGLES ±

APPROVALS	DATE
DRAWN	
CHECKED	

© 1977 IMSAI MFG. CORP., SAN LEANDRO, CA.
ALL RIGHTS RESERVED WORLDWIDE
MADE IN U.S.A.

IMSAI 8080 SYSTEM
CPA REV. 4
SCHEMATIC DIAGRAM

SCALE | SIZE B | DRAWING NO.

DO NOT SCALE DRAWING | SHEET